TM70P02D

P -Channel Enhancement Mosfet

General Description

- Low $R_{DS(ON)}$
- RoHS and Halogen-Free Compliant

Applications

- Load switch
- PWM

General Features

V_{DS} =-20V I_D =-70A

$R_{DS(ON)}$ =6.5mΩ(typ.)@V_{GS}=-4.5V

100% UIS Tested
100% R_g Tested

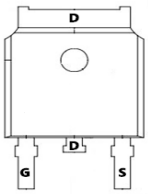

Marking:70P02

D:TO-252-3L

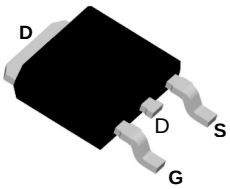

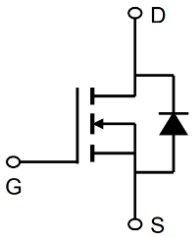

Absolute Maximum Ratings (T_C=25℃unless otherwise noted)

Symbol	Parameter		Max.	Units
V_{DSS}	Drain-Source Voltage		-20	V
V_{GSS}	Gate-Source Voltage		±12	V
I_D	Continuous Drain Current	T_C = 25℃	-70	A
		T_C = 100℃	-39	
I_{DM}	Pulsed Drain Current note1		-190	A
P_D	Power Dissipation	T_C= 25℃	70	W
$R_{\theta JC}$	Thermal Resistance, Junction to Ambient		2.1	℃/ W
T_J, T_{STG}	Operating and Storage Temperature Range		-55 to +175	℃

© 2018 Tritech-MOS Technology Corporation

Electrical Characteristics (T_J=25℃ unless otherwise specified)

Symbol	Parameter	Test Condition	Min.	Typ.	Max.	Units
Off Characteristic						
$V_{(BR)DSS}$	Drain-Source Breakdown Voltage	V_{GS}=0V,I_D= -250μA	-20	-	-	V
I_{DSS}	Zero Gate Voltage Drain Current	V_{DS} = -20V, V_{GS} = 0V,	-	-	-1	μA
I_{GSS}	Gate to Body Leakage Current	V_{DS} =0V, V_{GS} = ±12V	-	-	±100	nA
On Characteristics						
$V_{GS(th)}$	Gate Threshold Voltage	V_{DS}= V_{GS}, I_D= -250μA	-0.5	-0.7	-1.0	V
$R_{DS(on)}$	Static Drain-Source on-Resistance note3	V_{GS} =-4.5V, I_D =-15A	-	6.5	7.5	mΩ
		V_{GS} =-2.5V, I_D =-12A	-	8	11	
Dynamic Characteristics						
C_{iss}	Input Capacitance	V_{DS} =-10V, V_{GS} =0V, f = 1.0MHz		3520	-	pF
C_{oss}	Output Capacitance		-	505	-	pF
C_{rss}	Reverse Transfer Capacitance		-	440	-	pF
Q_g	Total Gate Charge	V_{DS} =-10V, I_D =-15A, V_{GS} =-4.5V	-	46	-	nC
Q_{gs}	Gate-Source Charge		-	7.3	-	nC
Q_{gd}	Gate-Drain("Miller") Charge		-	10	-	nC
Switching Characteristics						
$t_{d(on)}$	Turn-on Delay Time	V_{DD} =-10V, I_D =-14A, R_{GEN}=2.7Ω, V_{GS} =-10V	-	8	-	ns
t_r	Turn-on Rise Time		-	59	-	ns
$t_{d(off)}$	Turn-off Delay Time		-	111	-	ns
t_f	Turn-off Fall Time		-	43	-	ns
Drain-Source Diode Characteristics and Maximum Ratings						
I_S	Maximum Continuous Drain to Source Diode Forward Current		-	-	-70	A
I_{SM}	Maximum Pulsed Drain to Source Diode Forward Current		-	-	-240	A
V_{SD}	Drain to Source Diode Forward Voltage	V_{GS} = 0V, I_S =-20A	-	-	-1.2	V
trr	Reverse Recovery Time	T_J=25℃,I_{SD}=-15A, V_{GS}=0V di/dt=-100A/μs	-	18	-	ns
Qrr	Reverse Recovery Charge		-	7.7	-	nC

Notes:1. Repetitive Rating: Pulse Width Limited by Maximum Junction Temperature

2. EAS condition: T_J=25℃,V_{DD}=-10V,V_G=-10V, R_G=5.9Ω, L=0.5mh,I_{AS}=-13.2A

3. Pulse Test: Pulse Width≤300μs, Duty Cycle≤0.5%

© 2018 Tritech-MOS Technology Corporation

Typical Performance Characteristics

Figure1: Output Characteristics

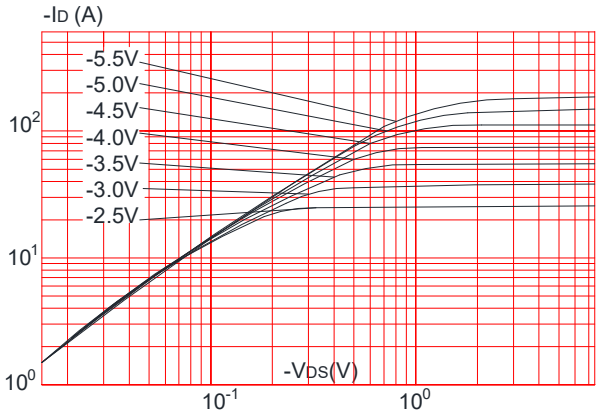

Figure 2: Typical Transfer Characteristics

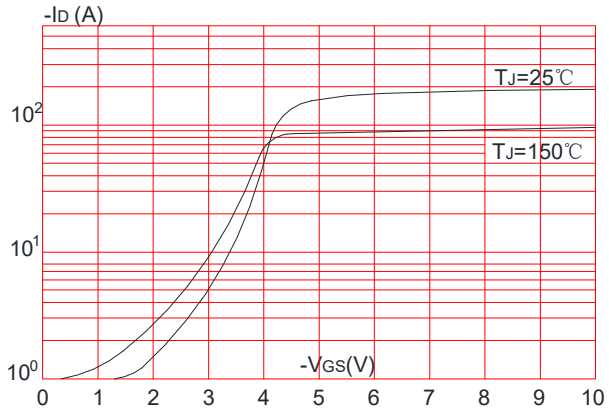

Figure 3: On-resistance vs. Drain Current

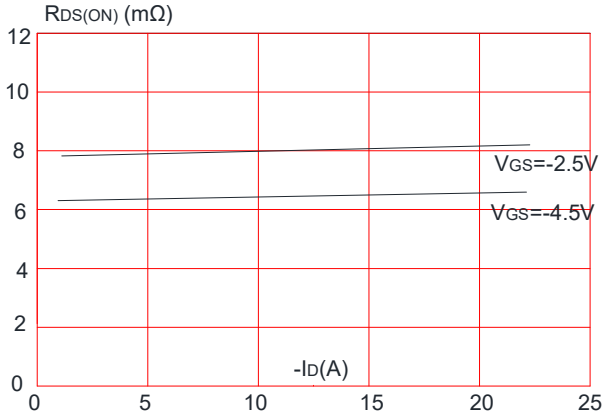

Figure 4: Body Diode Characteristics

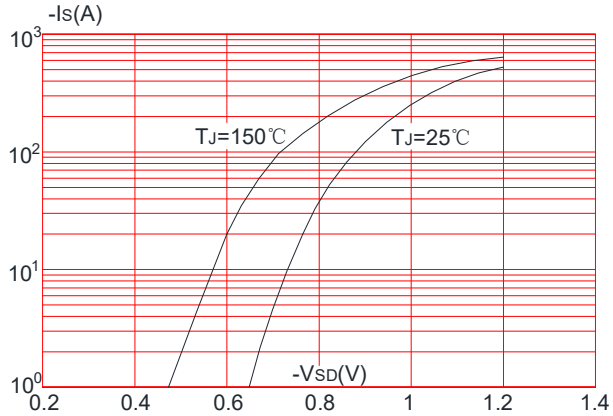

Figure 5: Gate Charge Characteristics

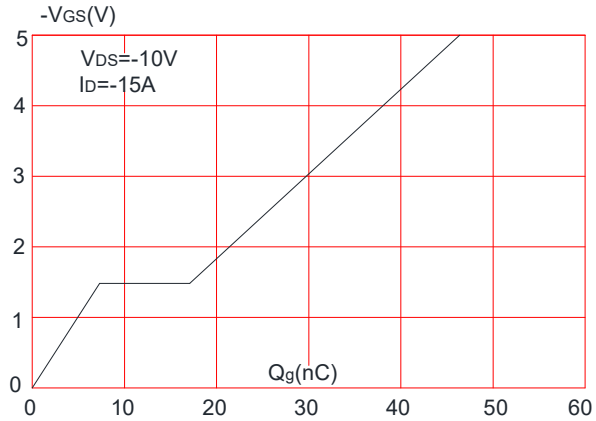

Figure 6: Capacitance Characteristics

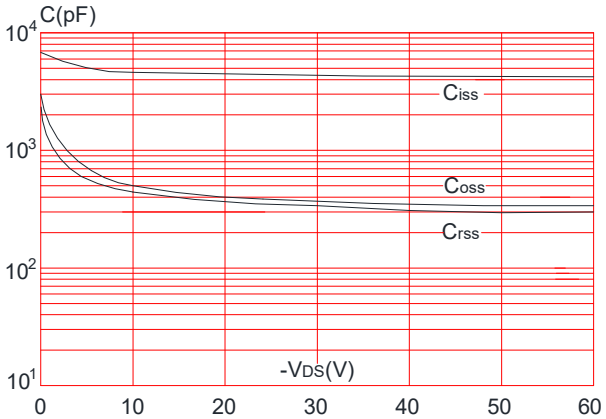

© 2018 Tritech-MOS Technology Corporation

Figure 7: Normalized Breakdown Voltage vs. Junction Temperature

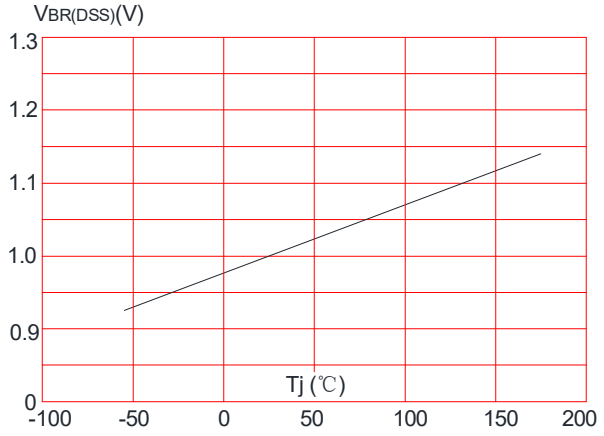

Figure 8: Normalized on Resistance vs. Junction Temperature

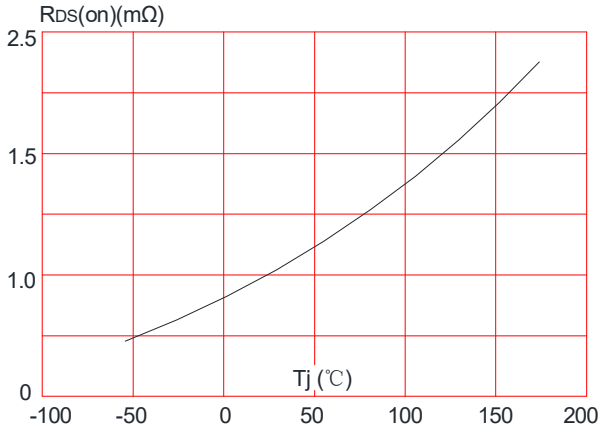

Figure 9: Maximum Safe Operating Area

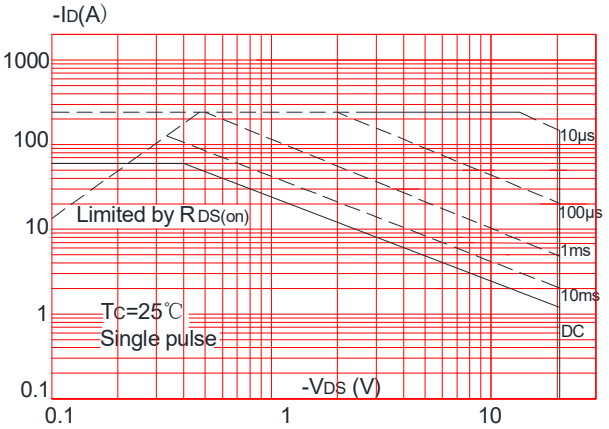

Figure 10: Maximum Continuous Drain Current vs. Case Temperature

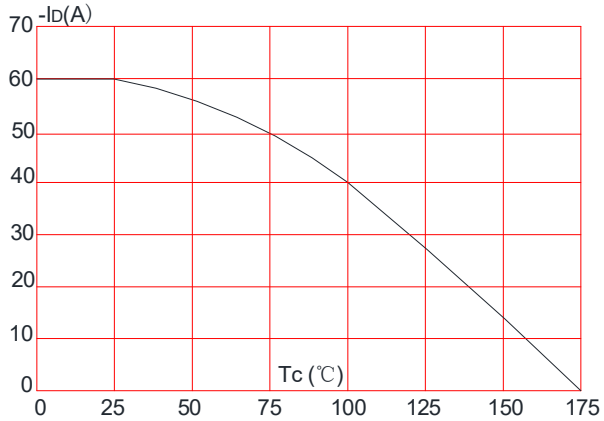

Figure.11: Maximum Effective Transient Thermal Impedance, Junction-to-Case

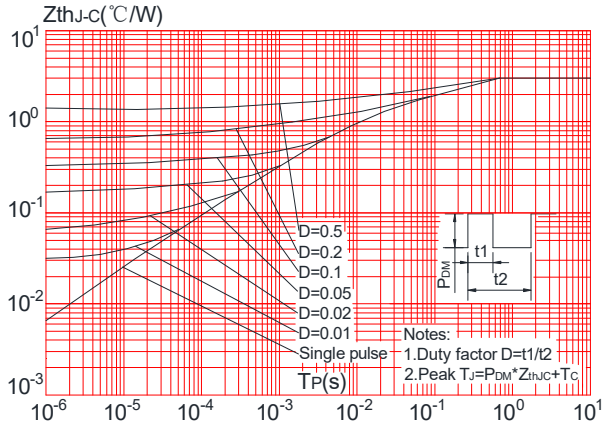

Test Circuit

Gate Charge Test Circuit & Waveform

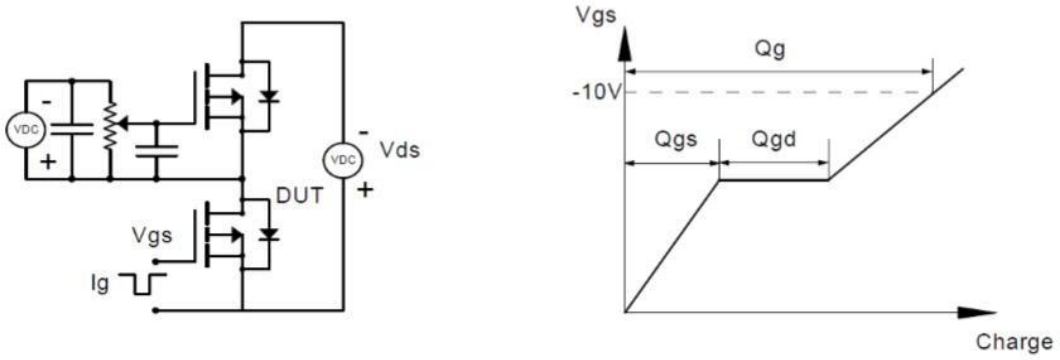

Resistive Switching Test Circuit & Waveforms

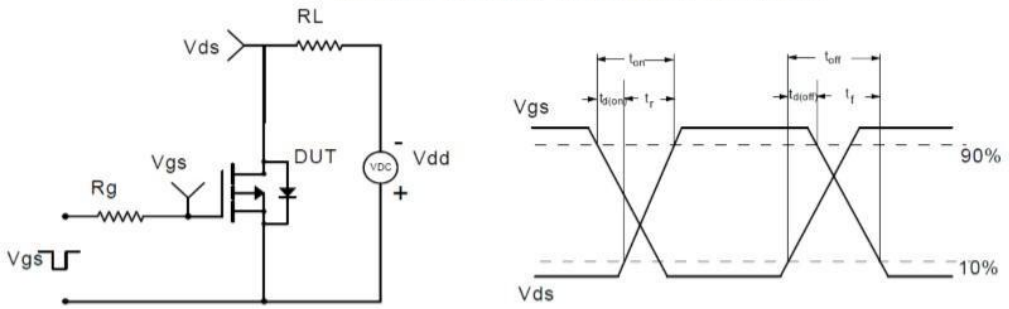

Unclamped Inductive Switching (UIS) Test Circuit & Waveforms

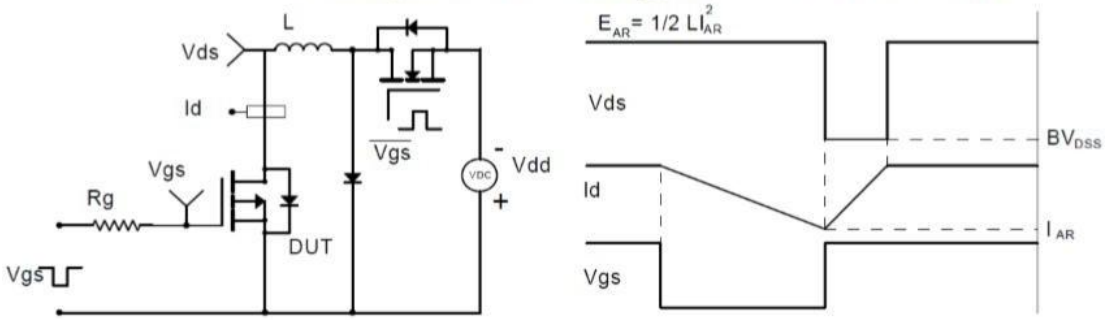

Diode Recovery Test Circuit & Waveforms

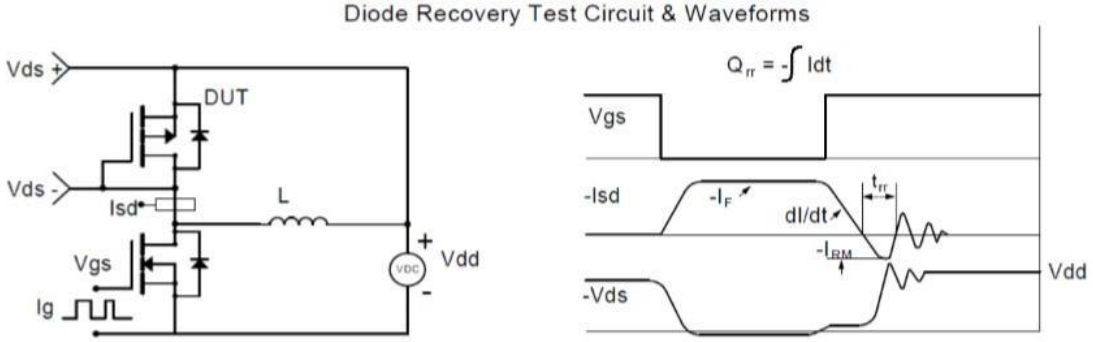

Package Mechanical Data: TO-252-3L

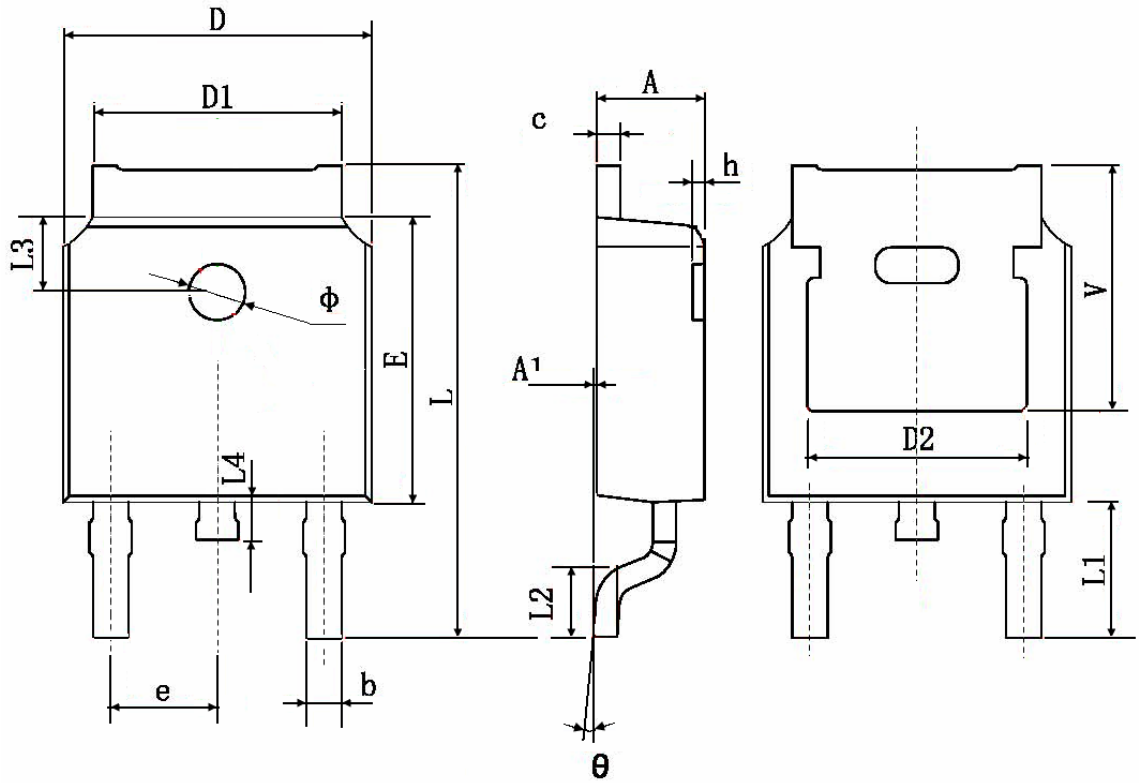

Symbol	Dimensions In Millimeters		Dimensions In Inches	
	Min.	Max.	Min.	Max.
A	2.200	2.400	0.087	0.094
A1	0.000	0.127	0.000	0.005
b	0.660	0.860	0.026	0.034
c	0.460	0.580	0.018	0.023
D	6.500	6.700	0.256	0.264
D1	5.100	5.460	0.201	0.215
D2	4.830 TYP.		0.190 TYP.	
E	6.000	6.200	0.236	0.244
e	2.186	2.386	0.086	0.094
L	9.800	10.400	0.386	0.409
L1	2.900 TYP.		0.114 TYP.	
L2	1.400	1.700	0.055	0.067
L3	1.600 TYP.		0.063 TYP.	
L4	0.600	1.000	0.024	0.039
Φ	1.100	1.300	0.043	0.051
θ	0°	8°	0°	8°
h	0.000	0.300	0.000	0.012
V	5.350 TYP.		0.211 TYP.	

© 2018 Tritech-MOS Technology Corporation